The $20 Combat Crossbow.

-by Godfrey Thacker of Northumberland.

The basic design for the 2x4 crossbow was introduced in the East Kingdom by Baron Mutsura. I've made a few changes to the original design to make it entirely out of parts you would find at Home Depot or Lowe's and to make it easier to build if you don't have a full workshop.

Some notes on this crossbow. It won't be pretty. It won't last forever. It's not legal in all Kingdoms. Outlands has specifically banned fiberglass rod prods. They are good in the Middle and Aethelmearc, so they should pass at Pennsic. But if you just want to try out combat archery to see whether it's worth saving up for a good crossbow, this is a cool way to do it.

Parts Needed		Cost Per Unit	Cost	Cost Per Bow
4	Fiberglass Marker Rods	$1.99 Ea.	$7.96	$7.96
1	8' 2x4, Premium	$2.37 Ea	$2.37*	$0.79
1	8' 1x3 Furring Strip	$1.39 Ea.	$1.39*	$0.69
1	36" 1/2"x1/8" Steel Bar	$3.27 Ea.	$3.27*	$1.69
2	3/4" Copper Pipe Caps	$0.75Ea.	$1.50	$1.50
6	#10 x 2" Wood Screws	$0.98 per Bag (6)	$0.98	$0.98
2	#10 x 1-1/2" Wood Screws	$0.98 per Bag(6)	$0.98	$0.33
1	3/8" x 3-1/2" Mach. Bolt	$0.38 Ea.	$0.38	$0.38
1	3/8 Nylock Nut	$0.98 per Bag (2)	$0.98*	$0.49
2	3/4" Nylon Spacers	$0.59Ea	$1.08	$1.08
6	1-1/2" Roofing Nails	$1.39 per Box	$1.39*	$0.13
5'	1/4" Nylon braided rope	$0.17 per foot	$0.85	$0.85
1	19/64" Drill Bit**	$3.50 Ea	$3.50	$0.88
			---	---
	Total Cost of One:		$26.83	

- Cost each if you split the extra parts among 4 friends: $17.89

*These items will have enough left over to make at least 1 more crossbow.
** I include this in parts because this size generally isn't part of a standard drill bit set.

Tools needed:

Hand Saw (Jig saw is nice)
Hacksaw
Hammer
Screwdriver
Pliers
Carpenter or Combo square
Tape Measure
Drill (A Drill press is really nice)
19/64" Drill Bit (to match diameter of marker posts)
3/8" Drill Bit
1/8" Drill
3/16" Drill
1/2" Drill Bit (optional)
Wood Rasp
Sand Paper
Fine Mill File
(One-time access to a thickness planer is good for fine tuning, but not critical.)

The Stock

The main stock is made out of a 2x4. When you're picking one out, make sure it's nice and straight and relatively free of knots. Try to do the same with the 1x3. Especially if you are splitting the wood to make a few crossbows.

A 2x4 is really 1-1/2" x 3-1/2". Since siloflex and golf tube bolts are 1-1/4" sanding or planing an 1/8" or so off the thickness is a nice touch, but not really necessary (don't go too close to 1-1/4", you need some clearance).

The center stock is laid out as below. The first thing to do is drill a 3/8" hole for the firing pin. This will be much easier while the stock is all square. This is where the drill press is nice, but if you have to do it by hand, just be sure to square it up as best you can. Make sure the firing pin hole is centered in the thickness of the 2x4.

Now we cut the stock to shape. Note it is all straight cuts. You can do this with a hand saw, then file and sand the corners smooth. Do not round off the upper edge or front edges – they need to be nice and square. If you have a jig saw, you can get closer to the final shape and save time sanding. It is easier to make the rip cuts first (the ones that go along he grain). The exact shape of the stock is somewhat objective, but the firing pin hole should be 16-1/2" from the front of the stock.

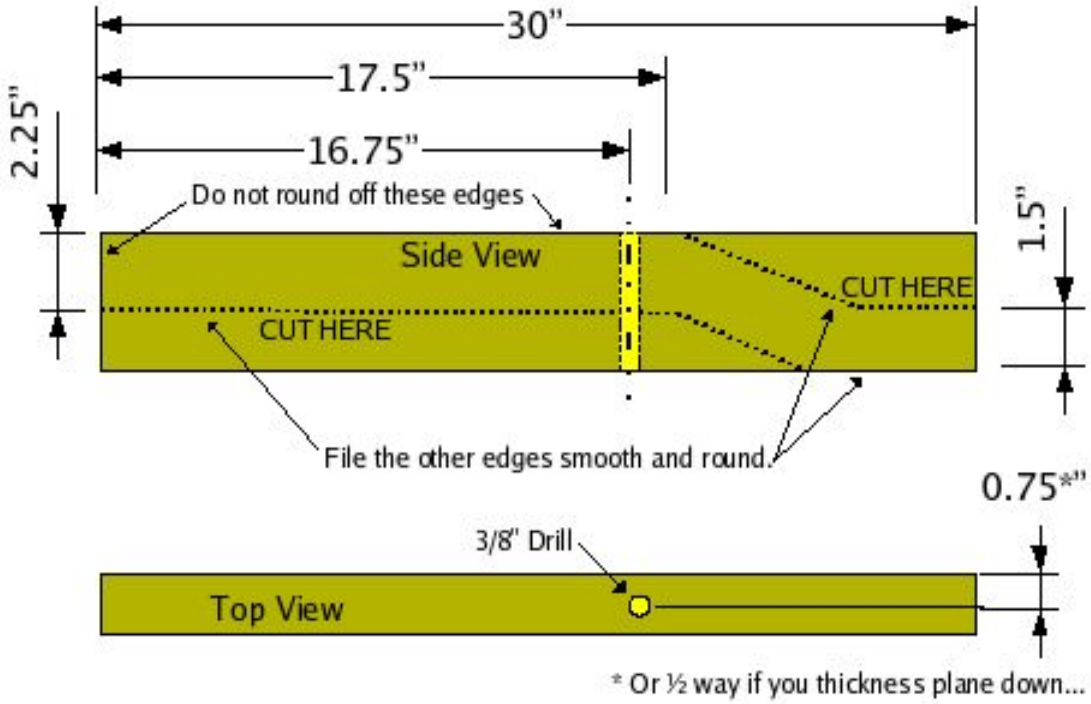

Figure 1 – Overall Stock Layout

At the front of the stock, you next drill 4 holes to take the prods using the 19/64" bit. Leave at least 1/4-3/8" of wood between the holes or the wood may split. Round off the sharp edges of the holes to avoid a stress point on the prod. Lightly touching with the 1/2" drill works well, or use sand paper.

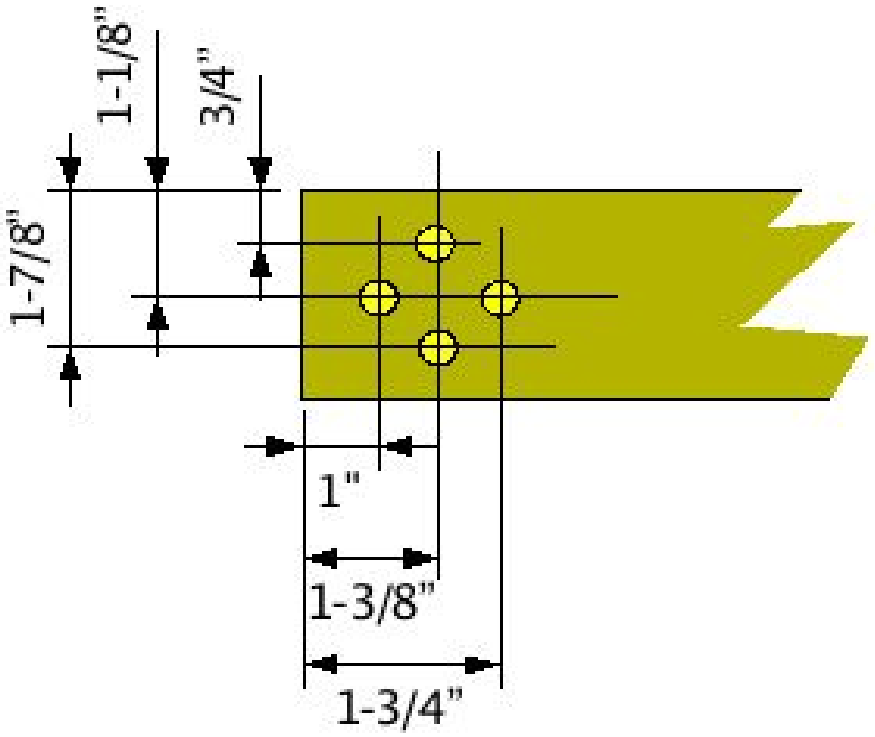

Figure 2 – Prod Hole Layout

Next, drill pilot holes on either side of the firing pin hole 3/16" forward of the centerline of the hole, and 3/8" on either side. Drive 2 of the #10 x2" screws into the holes until only the un-threaded part protrudes.

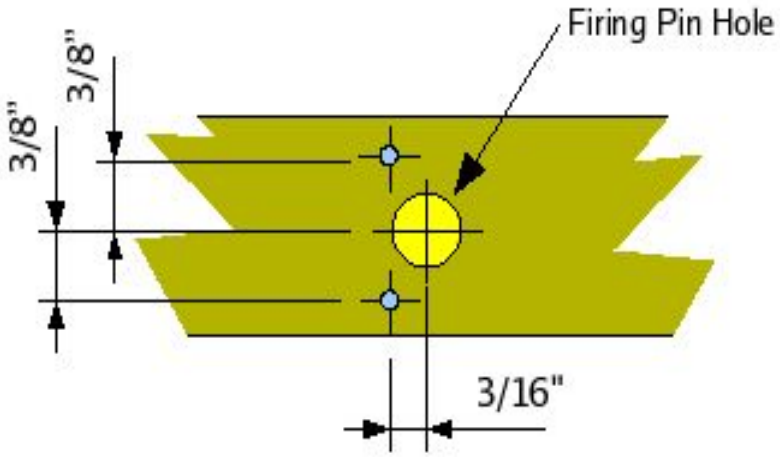

Figure 3 – Retaining Pin Locations

Use the hacksaw to saw off the screws heads. They should protrude a little over 1/2". A forward angle is desirable. Use the mill file and some sandpaper to give the cut screws a very smooth finish. These will hold the bowstring until the firing pin lifts it into the bolt's nock. Take your time with the filing and sanding, sharp edges or burrs on the cut ends of the screws will cut the bowstring.

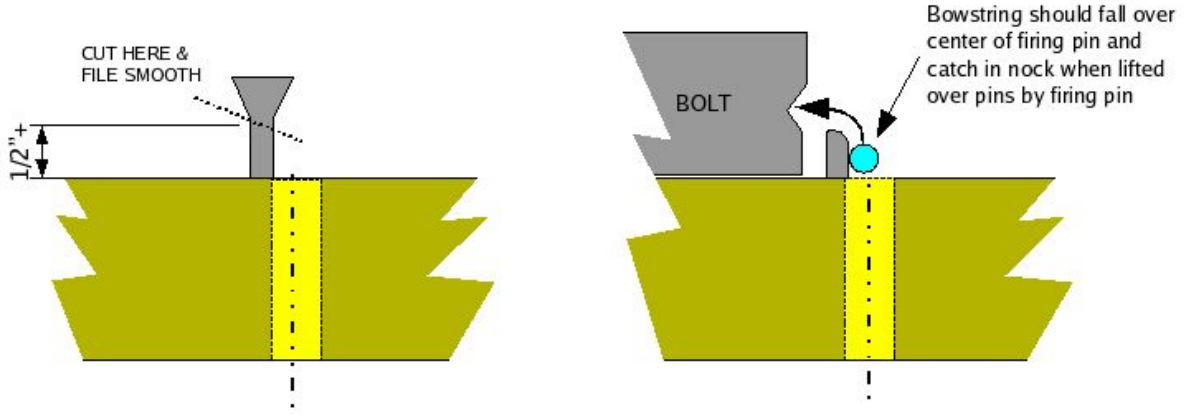

Figure 4 – Retaining Pins

Cut two 13-1/2" pieces of the 1x3. Nail or screw them 1/2" behind the rear prod hole on either side of the stock, as shown. They should sit about 1/2" above the top of the stock so the bowstring will sit in the nock while just touching the top of these rails. File and sand the outside rear corners round so the bowstring can't snag. Sand the top edge of the rails smooth. In the long run, a coat of varnish on these rails will help to "lubricate" the bowstring. Wax will also help.

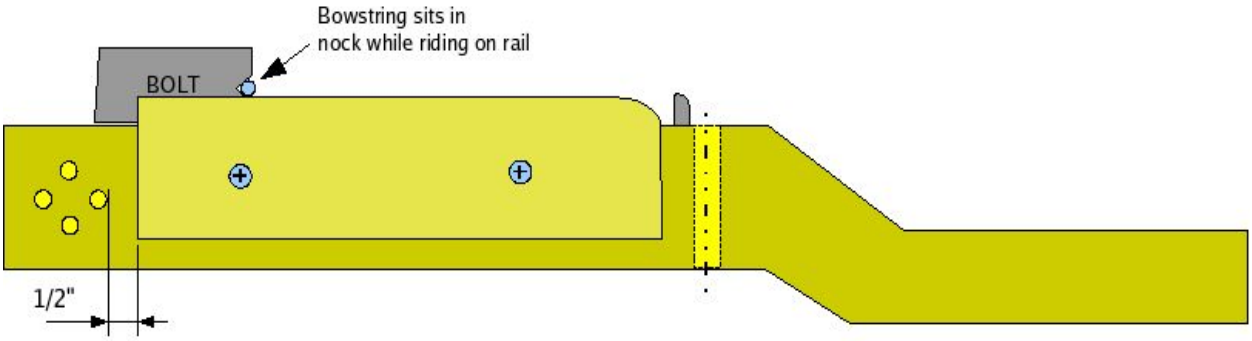

Figure 5 – Side Rails

The trigger mechanism, or tickler, is made from 6" of the flat bar stock. File burrs and corners off both ends making one rounder than the other. Drill 2 3/16" holes centered in the last inch of one end of the bar as shown. Oval the holes front to back out by "weedling" the drill a bit, especially the inside one. Bend it slightly just inside the inside hole at the dotted line.

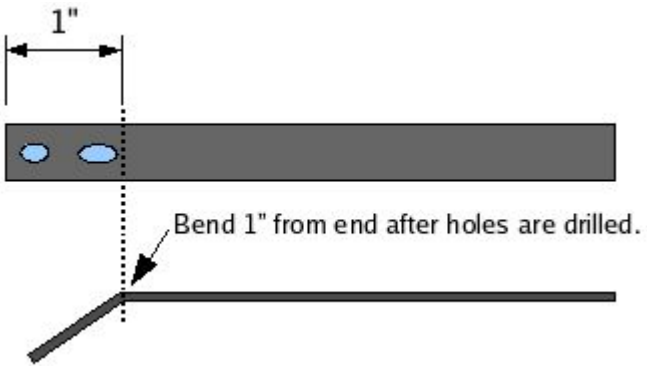

Figure 6 - Tickler

Use 2 wood screws to secure it to the stock about 1-1/2" forward of the firing pin hole. Leave the screws loose so the tickler floats. The rear screw is just to guide the trigger and should be left looser. The bend should "almost" parallel the angled part of the stock. There should be roughly an inch between the stock and the tickler at the firing pin hole.

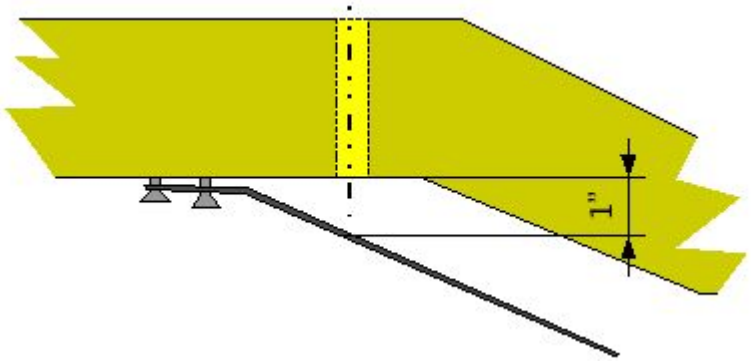

Figure 7 – Securing the Tickler to the stock.

Drop the 3/8" bolt into the firing pin hole from the top. File and sand the hole until the pin slides freely. When done, drop in the hole and screw the Nylock nut on between the stock and the tickler. With the tickler down and the nut riding on the tickler, mark where the bolt is flush with the stock. Depress the tickler. If the mark clears the two holding pins, the tickler is adjusted correctly. If not, adjust the bend and the tightness of the screws holding the tickler in and draw a new mark.

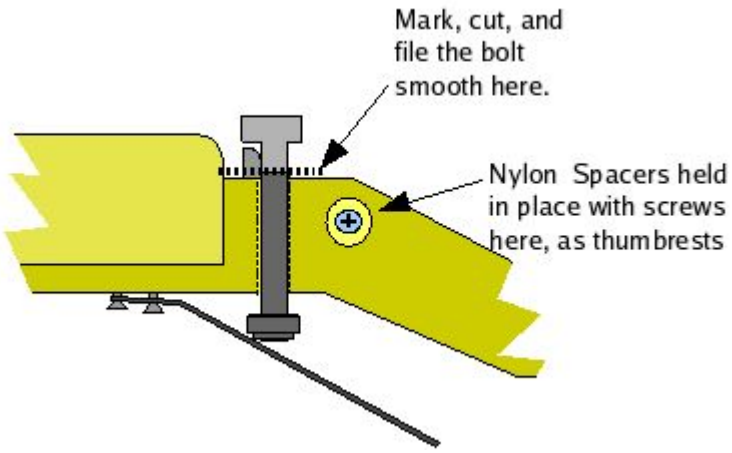

Figure 8 – Making the Firing Pin and installing the thumb rests.

When the mark is flush with the stock with the tickler down, an flush with the holding pins with the tickler up, remove the nut, pull out the firing pin and cut the bolt at the mark. File and sand the edges smooth. Return to the firing pin hole and re-thread into the nut. Once the top of the nut is cut off, you will need to hold the bottom of the pin with pliers to tighten the nylock nut.

Place the 2 nylon spaces over the #10 x 1-1/2" screws and attach to either side of the stock just to the rear of the firing pin. This is to rest your thumbs on when cocking.

Cut a 12" piece of flat bar, file burs, and drill a 3/16" hole in each end. Bend into a trigger guard and screw onto the stock over the trigger.

Three of marker rods should be cut to 31", the last to 32-1/2". If your rods aren't exactly 19/64" like the ones I found, make the cuts a little long. You may need to trim them to get the correct draw weight. Mark the center of each rod and make a mark 3/4" on either side of that.

Place the long rod in the rear most prod hole. Place the others in the other holes. Use the marks to center them in the holes. Use some duct tape to temporarily hold them in place.

Take the 2 Pipe caps and drill a 19/64" hole off-center in the cap. The hole should be as close to the wall of the cap as possible. File and sand off burrs.

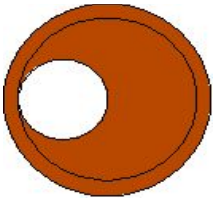

Figure 9 – Pipe Cap.

Place the caps over the ends of the prods with the long rod going through the hole.
Place a few wraps of strapping tape around prods as at intervals as a safety feature. This prevents a broken prod from flying off and hitting someone. It also prevents the prods from slipping in the holes.

Tie a bowline knot in one end of the rope. Slip over one end of prod. Adjust length and place second knot in line. You can adjust the length of this to fine tune the draw weight and total power (total power = pull at full cock X length of draw). Since the prods have no natural bend, you may need a bit of help to string it.

Another option is to make a second loose string to bend the prods slightly with, then put the fitted string on. Pass the eye of the second bowstring through the eye of the first so you can remove the first over the eye of the second.

Finishing touches:

Add a bolt clip made of pickle bucket plastic, heated and bent.

Wrap prods in light leather or cloth

Add a foot cocking loop with rope and a small piece of plastic pipe.